Mach Motion Products

MINIATURE BALL SCREWS

Miniature Ground Ball Screws

Brief introduction of Precision Miniature Ball Screw

Precision Miniature ball screw assemblies are conventionally understood to be systems with a nominal diameter of 16mm or less. Their miniaturized nut geometries are achieved through the use of optimized recirculation systems with very small balls.These ball screws are usually not preloaded or only slightly preloaded to ensure the smoothest possible travel. Miniature Ball Screws are normally used in high precision equipments and apparatus.
We developed a special metal deflector to replace the plastic deflector.The metal deflector can improve the service life, stability and smoothness. If the metal deflector is assembled together with the stainless steel screw shaft, nut and ball, the miniature ball screw can be used in the environment of high-temperature and corriosive environment.

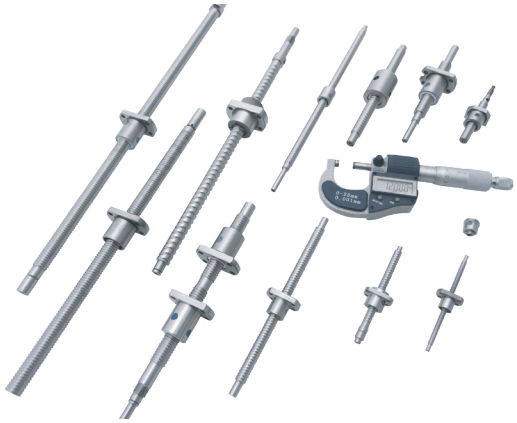

Applications

◊ CNC machines: CNC machine centre, CNC turning machines, milling machines, EDM machines, grinding machines, wire cut EDM machines, CNC boring machines.
◊ Industrial equipment: printing equipment, automation machinery, textile machines, drawing machines, injection molding machines, paper processing equipment.
◊ Electronic machines: measuring robots, XY working tables, medical equipment, SMT Equipment, semiconductor equipment, other automation equipments.
◊ Transport machinery: material handling equipment.

Miniature Ground Ball Screws

The range of Miniature Ball Screw

The range of our miniature Ball Screws is from φ4mm to φ16mm as shaft nominal diameter. Maximum limit of overall lengths are shown below. Maximum limit of overall lengths will vary depending on the shaft end configuration, materials. Please inquire Screwtech for details.

Shaft nominal diameter	Accuracy Grade		
	C3	C5	C7
4	100	100	/
6	180	180	400
8	250	250	450
10	400	400	650
12	500	500	700
14	600	600	700
16	770	770	1000
Note: if required length exceeds the number in table above, please ask Screwtech representative.			

Dust prevention

In Ball Screws, if dust or other contaminations intrude into the Ball Nut, wear is accelerated, the screw groove will be damaged, circulation will be obstructed due to Ball fracture, damage of recirculation parts and so on. Eventually, the Ball Screws will cease to function. Where the possibility of dust or other contaminant exists, the screw thread section cannot be left exposed, and dust prevention measure such as a bellows or Telescopic pipe must be taken.
Screwtech Miniature Ball Screws are concentrated on compact design for a feature of Miniature Ball Screw. Therefore, all models in the catalogue are the dimension without seals. Please inquire Screwtech if seals are required. Please note that Nut dimension may change due to seal installation. Some models cannot installed with seals.

Special Surface treatment

Surface treatment can be possible for the purpose of rust proof . Black oxide treatment is SCREWTECH standard surface treatment for the purpose of rust prevention. Please inquire SCREWTECH if other surface treatments are needed.

● Due to strict production management, film thickness can be treated equally and smoothness is kept.

High anti-rust ability is possible.

Round Nut with Flange - MIF

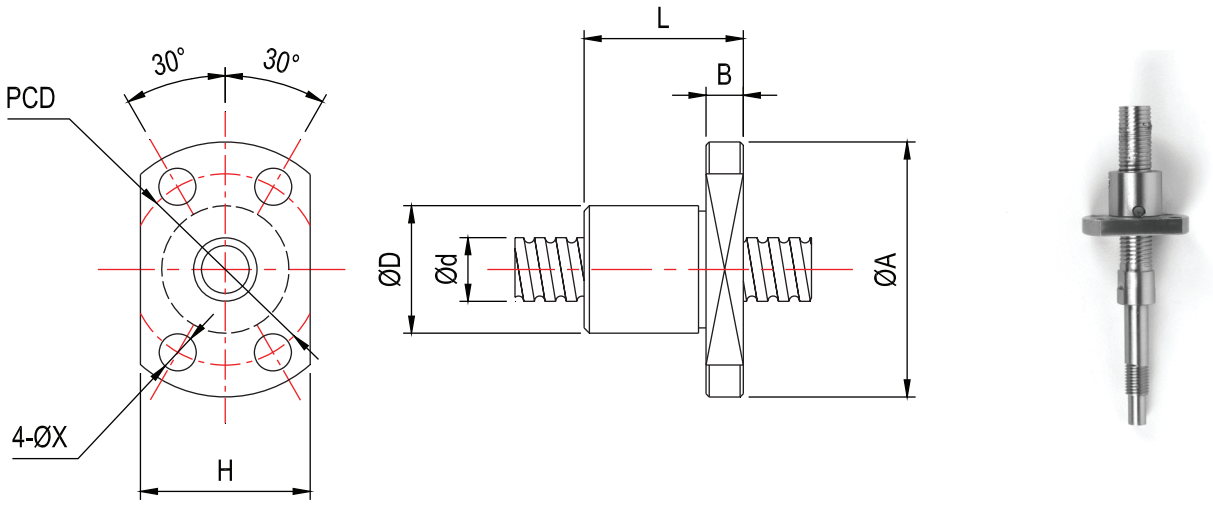

Code	d	P	Dw	n	Ca	Coa	K	Nut Dimension									
								D	A	B	L	PCD	H	X	Y	Z	Q
MIF0401	4	1	0.8	2	40	51	2.8	10	20	3	12	15	14	2.9	/	/	/
MIF0601	6	1	0.8	2	66	111	6.8	12	24	3.5	15	18	16	3.4	/	/	/
MIF0602	6	2	1.2	3	73	121	6.8	12	24	4	18	18	16	3.4	/	/	/
MIF0801	8	1	0.8	3	161	403	14	14	27	4	16	21	18	3.4	/	/	/
MIF0802	8	2	1.2	3	222	458	13	14	27	4	16	21	18	3.4	/	/	/
MIF0802.5	8	2.5	1.2	3	221	457	13	16	29	4	26	23	20	3.4	/	/	/
MIF1002	10	2	1.588	3	243	569	15	18	35	5	28	27	22	4.5	/	/	/
MIF1003	10	3	2.0	3	245	570	15	20	35	5	30	27	22	4.5	/	/	/
MIF1004	10	4	2.381	3	468	905	17	22	46	10	38	36	28	4.5	/	/	/
MIF1201	12	1	0.8	3	173	317	15	20	37	5	28	29	24	4.5	/	/	/
MIF1202	12	2	1.588	3	334	902	22	20	37	5	28	29	24	4.5	/	/	/
MIF1202.5	12	2.5	1.588	3	355	981	22	20	37	5	28	29	24	4.5	/	/	/
MIF1203	12	3	1.6	3	365	990	22	20	37	5	28	29	24	4.5	/	/	/
MIF1205	12	5	2.0	3	619	883	22	22	40	8	38	32	24	4.5	/	/	/
MIF1402	14	2	1.588	3	354	1053	24	21	40	6	23	31	26	5.5	/	/	/
MIF1602	16	2	1.588	3	373	1200	26	25	43	10	40	35	29	5.5	/	/	/
MIF1602.5	16	2.5	1.588	3	400	1210	26	25	43	10	40	35	29	5.5	/	/	/
MIF1603	16	3	2.0	3	530	1380	26	25	43	10	40	35	29	5.5	/	/	/

Not: the size and shape of the nut can be made as per customers' requirement.

P: lead . Dw: ball diameter n: number of ball recirculation. K: stiffness (Kgf/μm).
Ca: basic dynamic rating load (Kgf). Coa: basic static rating load (Kgf).

Cylindrical nut without Flange - MIC

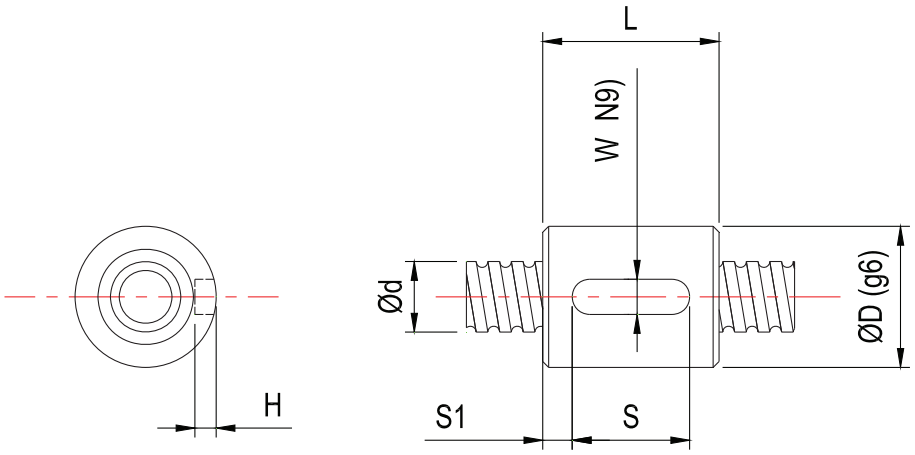

Code	d	P	Dw	n	Ca	Coa	K	Nut Dimension	
								D	L
MIC0401	4	1	0.8	2	40	51	2.8	10	12
MIC0601	6	1	0.8	2	66	111	6.8	12	15
MIC0602	6	2	1.2	3	73	121	6.8	12	15
MIC0801	8	1	0.8	3	135	225	7.4	14	16
MIC0802	8	2	1.2	3	135	225	7.4	14	16
MIC0802.5	8	2.5	1.2	3	177	278	7.4	16	26
MIC1002	10	2	1.588	3	185	305	9.0	18	28
MIC1003	10	3	2.0	3	185	305	9.0	18	28
MIC1004	10	4	2.381	3	395	590	9.0	26	34
MIC1201	12	1	0.8	3	173	317	11	20	28
MIC1202	12	2	1.588	3	173	317	11	20	28
MIC1202.5	12	2.5	1.588	3	173	317	11	20	28
MIC1203	12	3	1.6	3	173	317	11	20	28
MIC1205	12	5	2.0	3	619	883	17	22	38
MIC1402	14	2	1.588	3	287	633	12	21	23
MIC1602	16	2	1.588	3	253	670	12	25	40
MIC1602.5	16	2.5	1.588	3	253	670	12	25	40
MIC1603	16	3	2.0	3	253	670	12	25	40

Not: the size and shape of the nut can be made as per customers'requirement.

P: lead . Dw: ball diameter n: number of ball recirculation. K: stiffness (Kgf/μm).
Ca: basic dynamic rating load (Kgf). Coa: basic static rating load (Kgf).

Round Nut with Thread Mounting - MIA

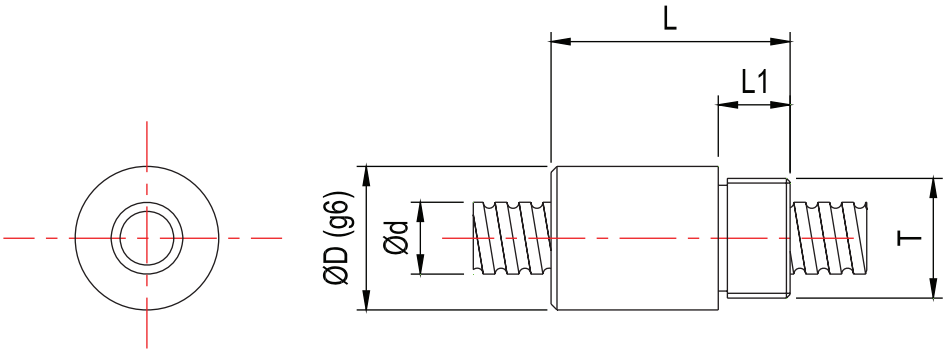

Code	d	P	Dw	n	Ca	Coa	K	Nut Dimension			
								D	L	L1	T
MIA0401	4	1	0.8	2	40	51	2.8	10	15	5	M8x0.75
MIA0601	6	1	0.8	2	66	111	6.8	12	15	5	M10x1
MIA0602	6	2	1.2	3	73	121	6.8	12	20	6	M10x1
MIA0801	8	1	0.8	3	135	225	7.4	16	22	8	M14x1
MIA0802	8	2	1.2	3	135	225	7.4	16	27	8	M14x1
MIA0802.5	8	2.5	1.2	3	177	278	7.4	16	29	8	M14x1
MIA1002	10	2	1.588	3	185	305	9.0	18	28	7	M16x1
MIA1003	10	3	2.0	3	185	305	9.0	18	28	7	M16x1
MIA1004	10	4	2.381	3	395	590	9.0	26	34	10	M16x1
MIA1201	12	1	0.8	3	173	317	11	20	39	10	M18x1
MIA1202	12	2	1.588	3	173	317	11	20	28	10	M18x1
MIA1202.5	12	2.5	1.588	3	173	317	11	20	28	10	M18x1
MIA1203	12	3	1.6	3	173	317	11	20	33	10	M18x1
MIA1205	12	5	2.0	3	619	883	17	24	38	10	M20x1
MIA1402	14	2	1.588	3	287	633	12	24	38	10	M20x1
MIA1602	16	2	1.588	3	253	671	12	25	44	10	M22x1
MIA1602.5	16	2.5	1.588	3	253	671	12	25	44	10	M22x1
MIA1603	16	3	2.0	3	253	671	12	25	44	10	M22x1

Not: the size and shape of the nut can be made as per customers' requirement.

P: lead . Dw: ball diameter n: number of ball recirculation. K: stiffness (Kgf/μm).
Ca: basic dynamic rating load (Kgf). Coa: basic static rating load (Kgf).

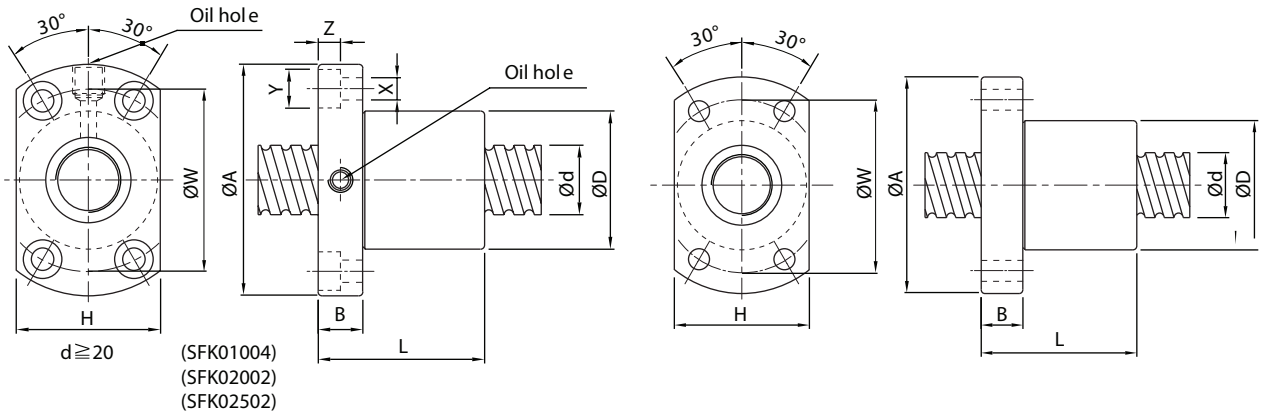

Code	d	P	Dw	Nut Dimension											(Kgf)		(K g f / μm)
				D	A	B	L	W	H	X	Y	Z	Q	n	Ca	Coa	
SFK0401	4	1	0.8	10	20	3	12	15	14	2.9	-	-	-	1x2	64	97	5
SFK0601	6	1	0.8	12	24	3.5	15	18	16	3.4	-	-	-	1x3	111	224	9
SFK0801	8	1	0.8	14	27	4	16	21	18	3.4	-	-	-	1x4	161	403	14
SFK0802		2	1.2	14	27	4	16	21	18	3.4	-	-	-	1x3	222	458	13
SFK0802.5		2.5	1.2	16	29	4	26	23	20	3.4	-	-	-	1x3	221	457	13
SFK1002	10	2	1.2	18	35	5	28	27	22	4.5	-	-	-	1x3	243	569	15
SFK1004		4	2	26	46	10	34	36	28	4.5	8	4.5	M6	1x3	468	905	17
SFK1202	12	2	1.2	20	37	5	28	29	24	4.5	-	-	-	1x4	334	906	22
SFK1402	14	2	1.2	21	40	6	23	31	26	5.5	-	-	-	1x4	354	1053	24
SFK1602	16	2	1.2	25	43	10	40	35	29	5.5	-	-	M6	1x4	373	1200	26
SFK2002	20	2	1.2	50	80	15	55	65	68	6.5	10.5	6	M6	1x6	581	2284	48
SFK2502	25	2	1.2	50	80	13	43	65	68	6.5	10.5	6	M6	1x5	540	2381	46
Left hand thread are available for above items.																	

Code	d	P	Dw	Nut Dimension											(Kgf)		(K g f / μm)
				D	A	B	L	W	H	X	Y	Z	Q	n	Ca	Coa	
XSUR1204T3D-02	12	4	2.5	24	40	6	28	32	25	3.5	-	-	-	1x3	454	722	-
XSUR1205T3D-00		5	2.5	22	37	8	39	29	24	4.5	-	-	-	1x3	675	1316	17

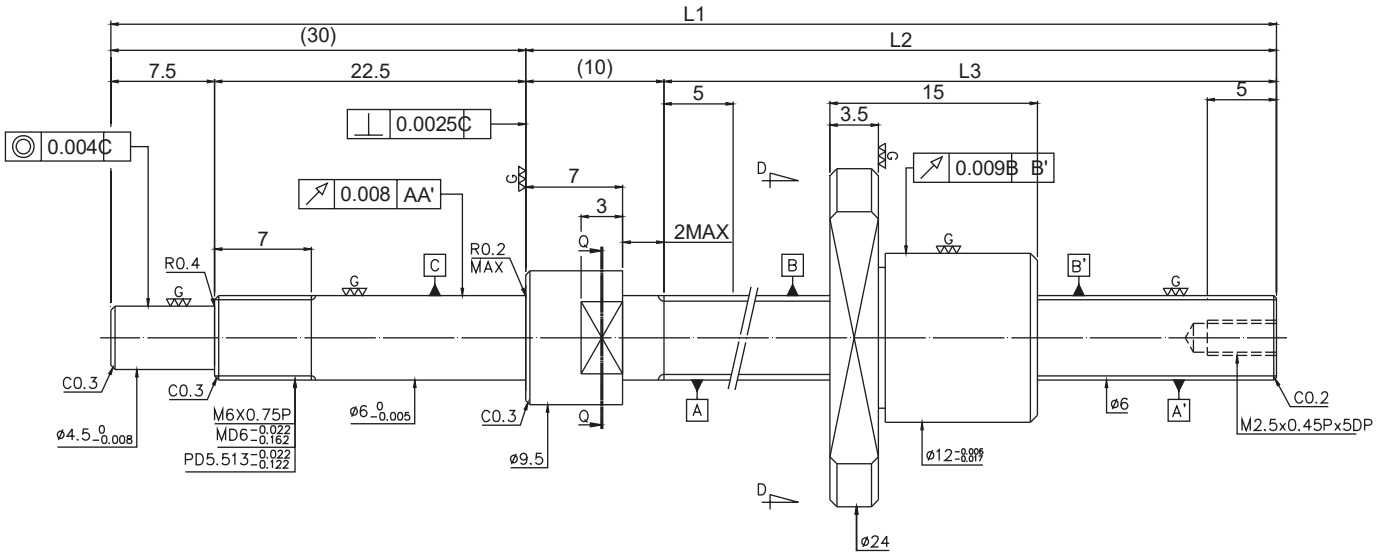

Ball Screw Specification		
Thread direction	LH/RH	
Lead (mm)	1/2	
Lead angle	2.99°	
Section circle diameter (mm)	6.1	
Shaft section circle diameter (mm)	6.1	
Root diameter(mm)	5.261	
Ball Dia(mm)	Φ0.8/Φ1.2	
No of Circuit	1x3	
Basic dynamic rating load (kgf)	66/73	
Basic static rating load (kgf)	111/121	
Axial play(mm)	0	0.005 MAX
Preload torque	0.13 MAX	0.003 MAX

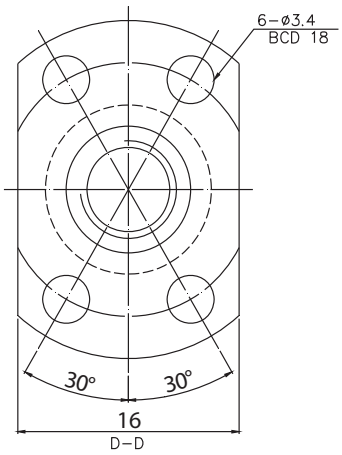

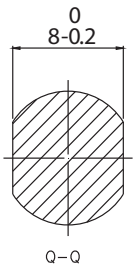

Stroke	Model No	L1	L2	L3	Accuracy grade
40	MIF0601/MIF0602-65x105	65	75	105	C3, C5
70	MIF0601/MIF0602-95x135	95	105	135	C3, C5
100	MIF0601/MIF0602-125x165	125	135	165	C3, C5

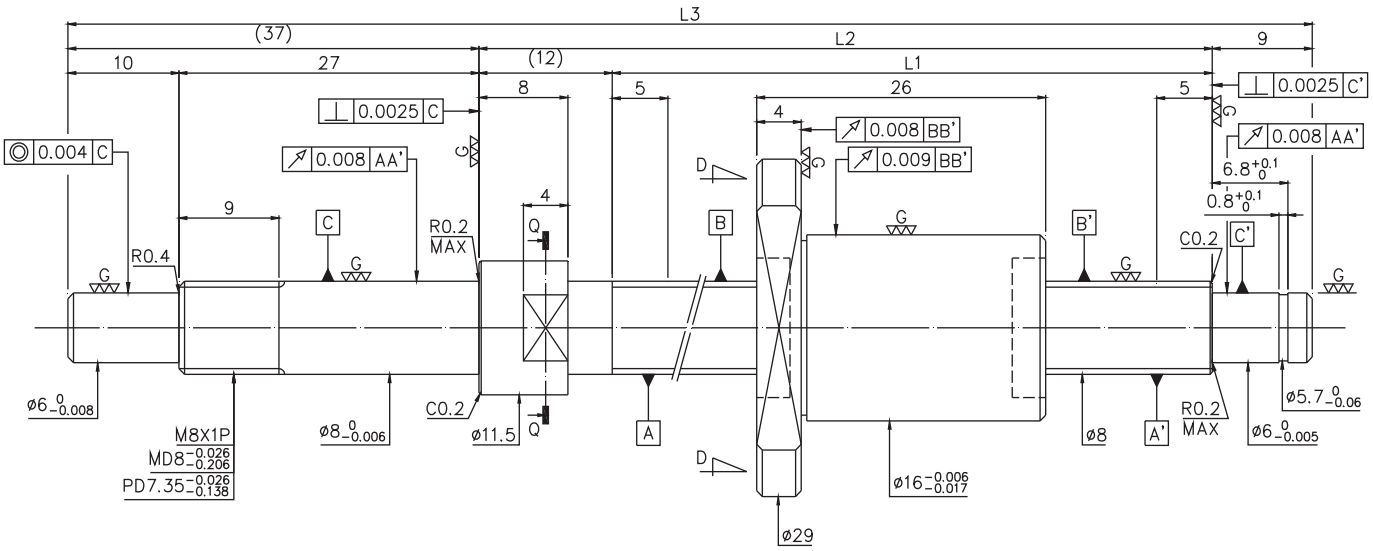

Ball Screw Specification		
Thread direction	LH/RH	
Lead (mm)	1/2	
Lead angle	4.44°	
Section circle diameter (mm)	8.2	
Shaft section circle diameter (mm)	8.2	
Root diameter(mm)	6.652	
Ball Dia(mm)	Φ0.8/Φ1.2	
No of Circuit	1x3	
Basic dynamic rating load (kgf)	161/222	
Basic static rating load (kgf)	403/458	
Axial play(mm)	0	0.005 MAX
Preload torque	0.20 MAX	0.003 MAX

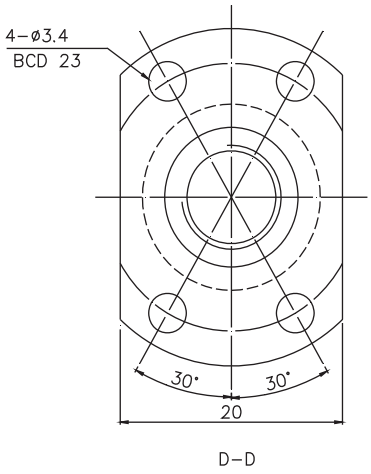

Stroke	Model No	L1	L2	L3	Accuracy grade
40	MIF0801/MIF0802-80x138	80	92	138	C3, C5
70	MIF0801/MIF0802-110x168	110	122	168	C3, C5
100	MIF0801/MIF0802-140x198	140	152	198	C3, C5
150	MIF0801/MIF0802-190x248	190	202	248	C3, C5

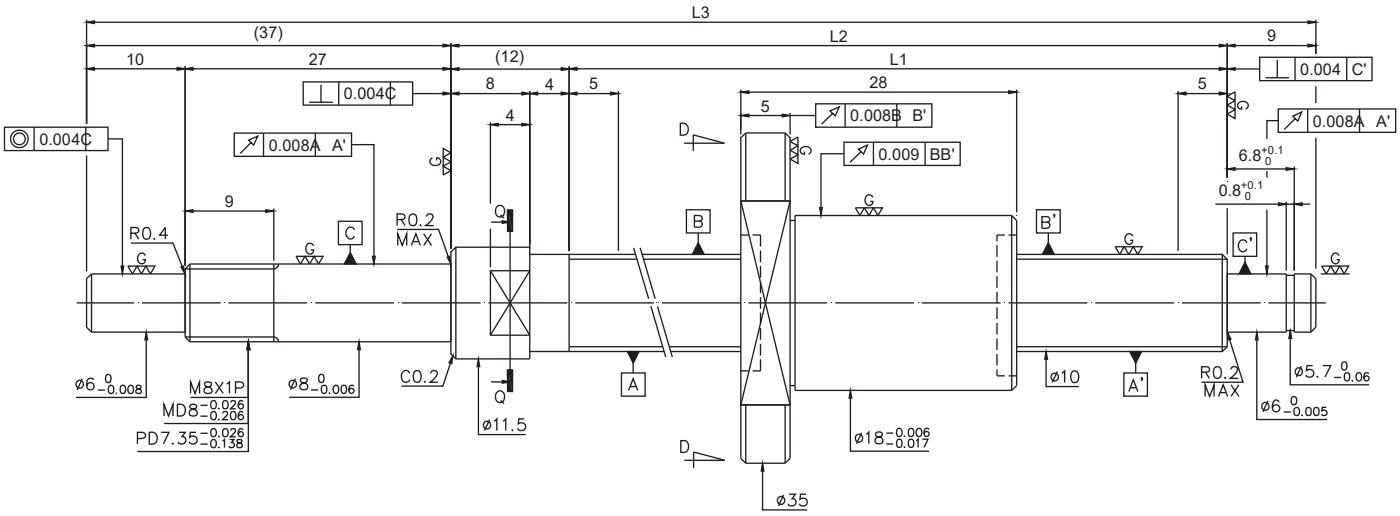

Ball Screw Specification		
Thread direction	LH/RH	
Lead (mm)	2	
Lead angle	3.57°	
Section circle diameter (mm)	10.2	
Shaft section circle diameter (mm)	10.2	
Root diameter(mm)	8.652	
Ball Dia(mm)	Φ1.588	
No of Circuit	1x3	
Basic dynamic rating load (kgf)	243	
Basic static rating load (kgf)	569	
Axial play(mm)	0	0.005 MAX
Preload torque	0.01-0.24	0.05 MAX

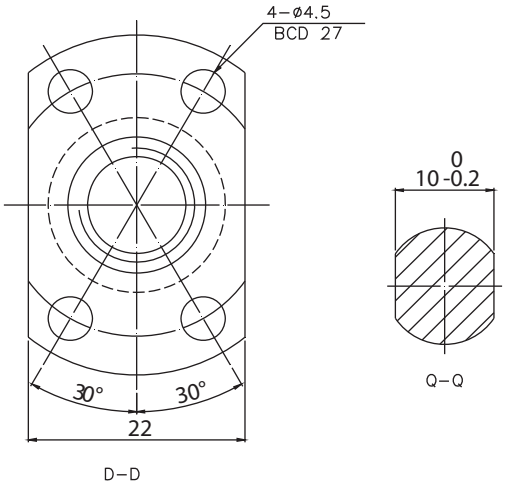

Stroke	Model No	L1	L2	L3	Accuracy grade
50	MIF1002-100x158	100	112	158	C3, C5
100	MIF1002-150x208	150	162	208	C3, C5
150	MIF1002-200x258	200	212	258	C3, C5
200	MIF1002-250x308	250	262	308	C3, C5

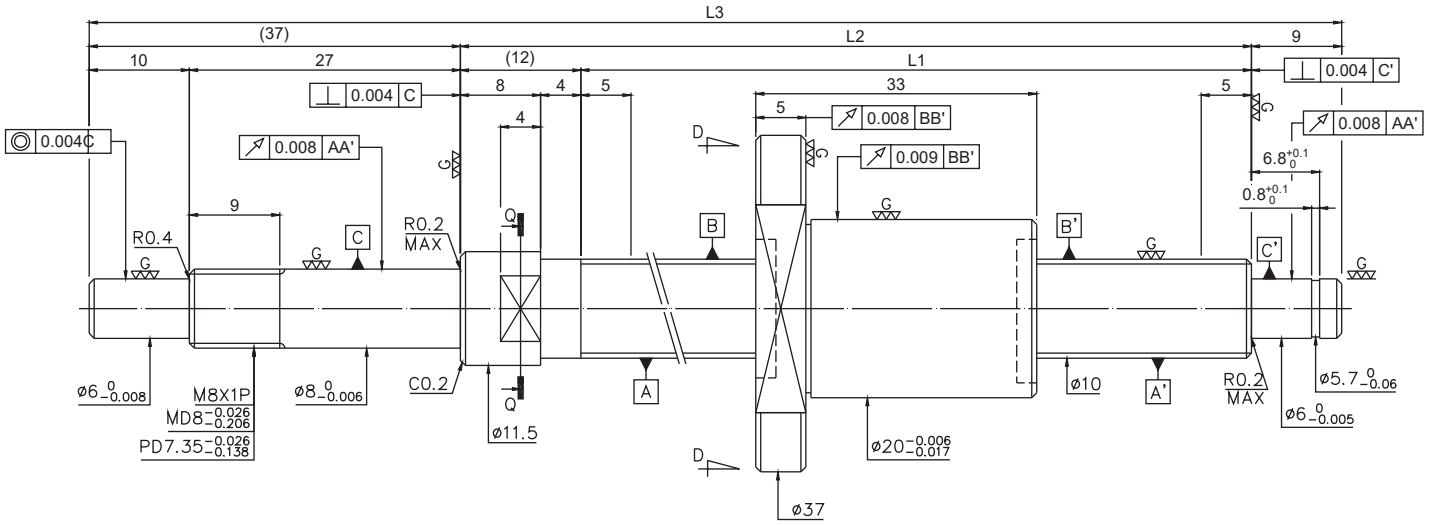

Ball Screw Specification		
Thread direction	LH/RH	
Lead (mm)	4	
Lead angle	7.11°	
Section circle diameter (mm)	10.2	
Shaft section circle diameter (mm)	10.2	
Root diameter(mm)	8.136	
Ball Dia(mm)	Φ2.381	
No of Circuit	1x3	
Basic dynamic rating load (kgf)	468	
Basic static rating load (kgf)	905	
Axial play(mm)	0	0.005 MAX
Preload torque	0.01-0.24	0.05 MAX

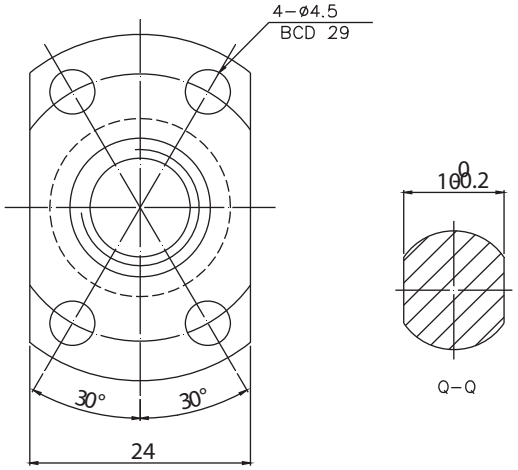

Stroke	Model No	L1	L2	L3	Accuracy grade
50	MIF1004-100x158	100	112	158	C3, C5
100	MIF1004-150x208	150	162	208	C3, C5
150	MIF1004-200x258	200	212	258	C3, C5
200	MIF1004-250x308	250	262	308	C3, C5

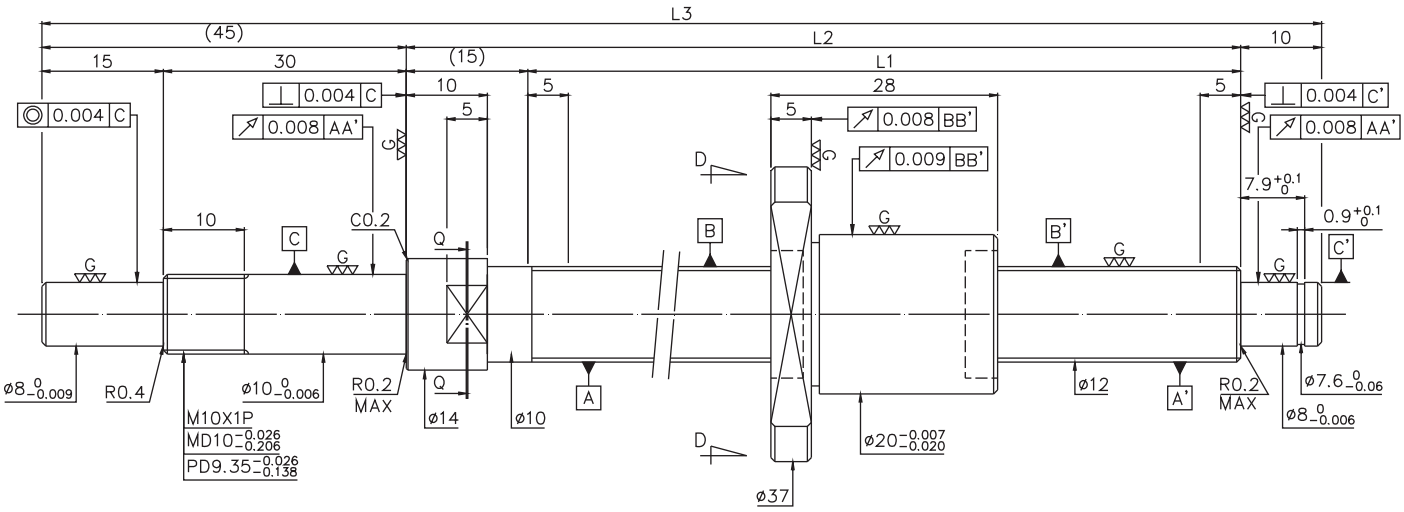

Ball Screw Specification		
Thread direction	LH/RH	
Lead (mm)	2	
Lead angle	2.99°	
Section circle diameter (mm)	12.2	
Shaft section circle diameter (mm)	12.2	
Root diameter(mm)	10.625	
Ball Dia(mm)	Φ1.588	
No of Circuit	1x3	
Basic dynamic rating load (kgf)	334	
Basic static rating load (kgf)	802	
Axial play(mm)	0	0.005 MAX
Preload torque	0.04-0.35	0.2 MAX

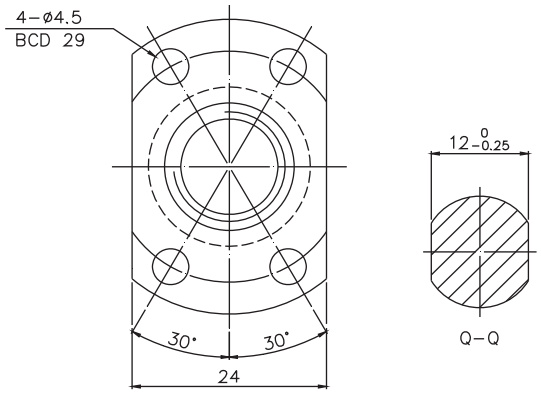

Stroke	Model No	L1	L2	L3	Accuracy grade
50	MIF1202-110x180	110	125	180	C3, C5
100	MIF1202-160x230	160	175	230	C3, C5
150	MIF1202-210x280	210	225	280	C3, C5
200	MIF1202-260x330	260	275	330	C3, C5
250	MIF1202-310x380	310	325	380	C5
290	MIF1202-350x420	350	365	420	C5
345	MIF1202-405x475	405	420	475	C5

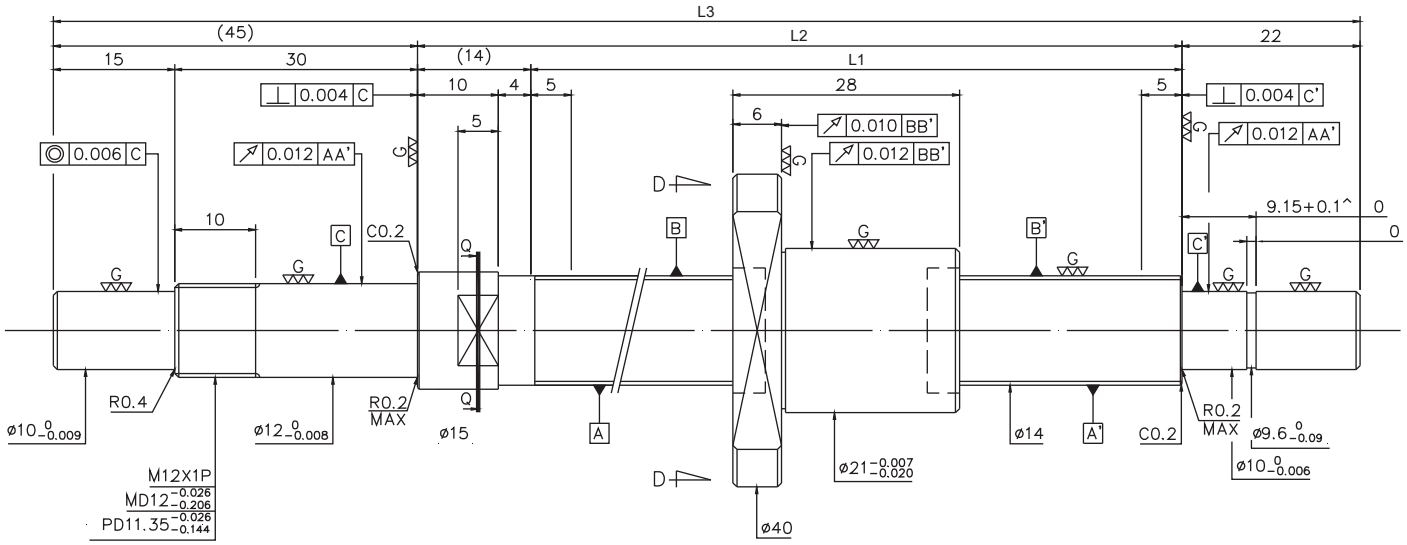

Ball Screw Specification		
Thread direction	LH/RH	
Lead (mm)	2	
Lead angle	2.57°	
Section circle diameter (mm)	14.2	
Shaft section circle diameter (mm)	14.2	
Root diameter(mm)	12.625	
Ball Dia(mm)	Φ1.588	
No of Circuit	1x3	
Basic dynamic rating load (kgf)	354	
Basic static rating load (kgf)	1083	
Axial play(mm)	0	0.005 MAX
Preload torque	0.05-0.5	-

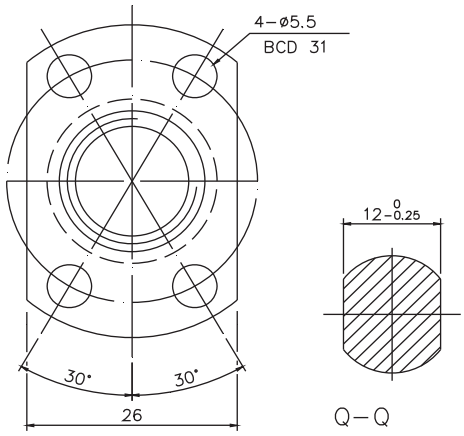

Stroke	Model No	L1	L2	L3	Accuracy grade
50	MIF1402-148x230	148	163	230	C3, C5
100	MIF1402-198x280	198	213	280	C3, C5
150	MIF1402-248x330	248	263	330	C3, C5
200	MIF1402-348x430	348	363	430	C3, C5
300	MIF1402-448x530	448	463	530	C5

Suggested End Machining of Screw Shaft

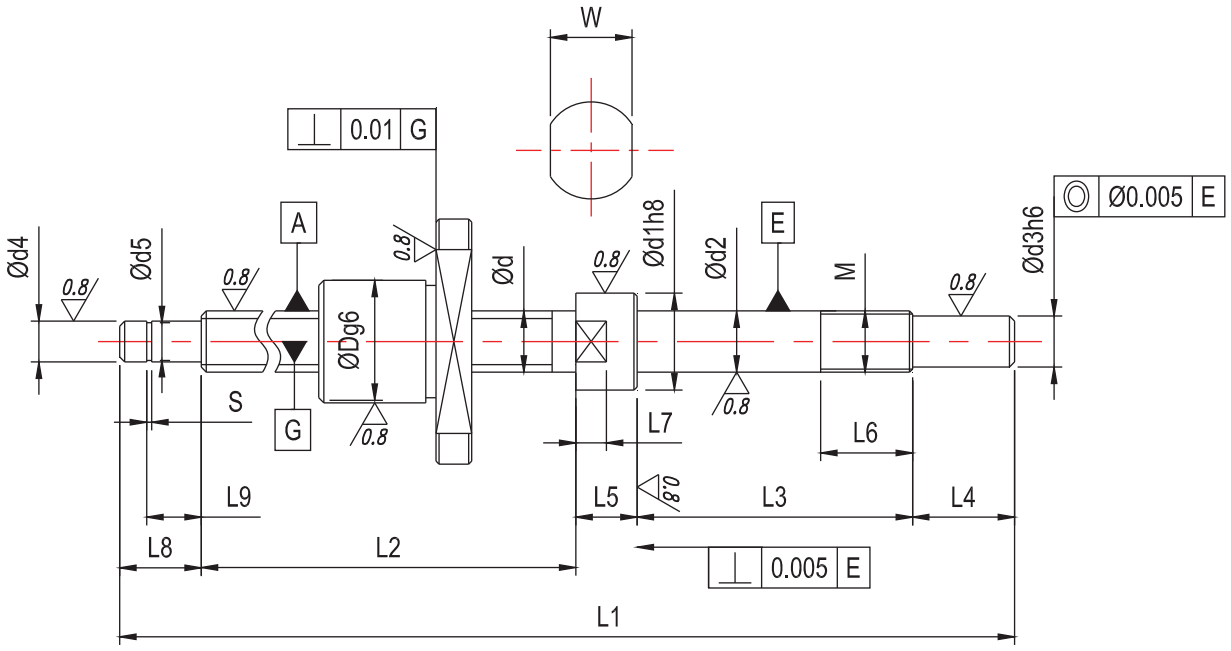

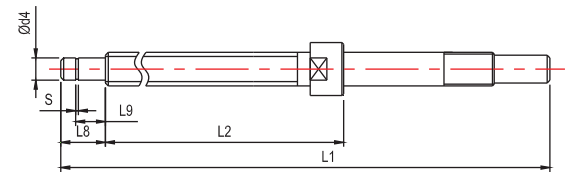

A

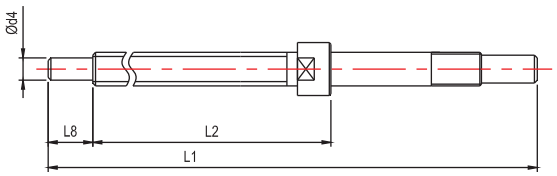

B

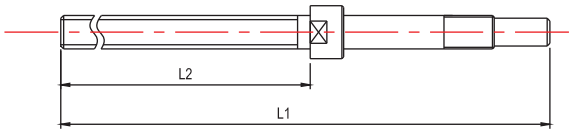

C

d	Fixed End A type B type C type													Support end				
														A type				
														B type		/		
	d1		L5	L7	W	d2		L3	M	L6	d3		L4	d4		L8	d5	S	L9
4	6	0 -0.018	6	2.5	5	4	-0.004 -0.012	18	M4x0.5	6.5	3	0 -0.006	5	3	-0.002 -0.010	7	2.7	0.5	4.35
6	8	0 -0.022	7	3	7	5	-0.004 -0.012	19	M5x0.5	6.5	4	0 -0.008	6	4	-0.002 -0.012	8	3.7	0.5	5.35
8	9.5	0 -0.022	7	3	8	6	-0.005 -0.014	22.5	M6x0.75	7	4.5	0 -0.008	7.5	6	-0.002 -0.012	9	5.7	0.8	6.8
10	11.5	0 -0.027	8	4	10	8	-0.005 -0.014	27	M8x1.0	9	6	0 -0.008	10	6	-0.002 -0.012	9	5.7	0.8	6.8
12	14	0 -0.027	10	5	12	10	-0.006 -0.017	30	M10x1.0	10	8	0 -0.009	15	8	-0.004 -0.012	10	7.6	0.9	7.9
14	15	0 -0.027	10	5	12	12	-0.006 -0.017	30	M12x1.0	10	10	0 -0.009	15	10	-0.004 -0.012	12	9.6	1.15	9.15
16	16	0 -0.027	10	5	12	12	-0.006 -0.017	30	M12x1.0	10	10	0 -0.009	15	10	-0.004 -0.012	12	9.6	1.15	9.15
Notes:Customized end machining is available upon request																			

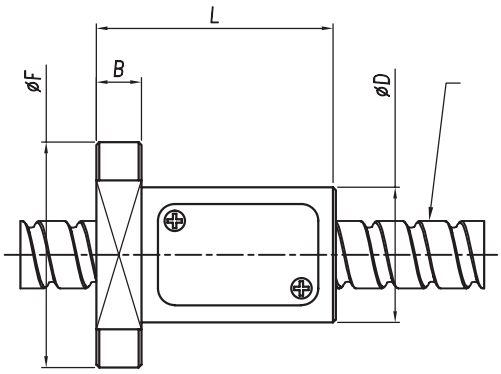

MPF0804 MPF0805 MPF1208 MPF1210

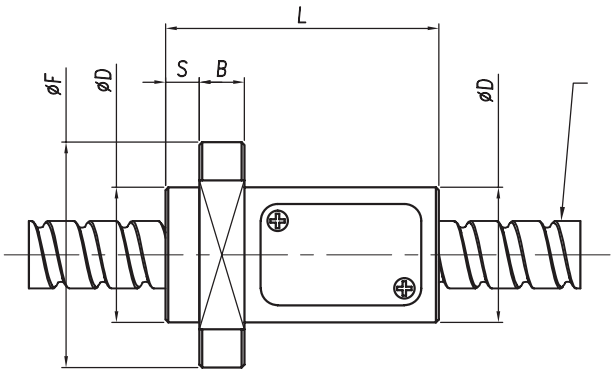

MPF0808 MPF1010

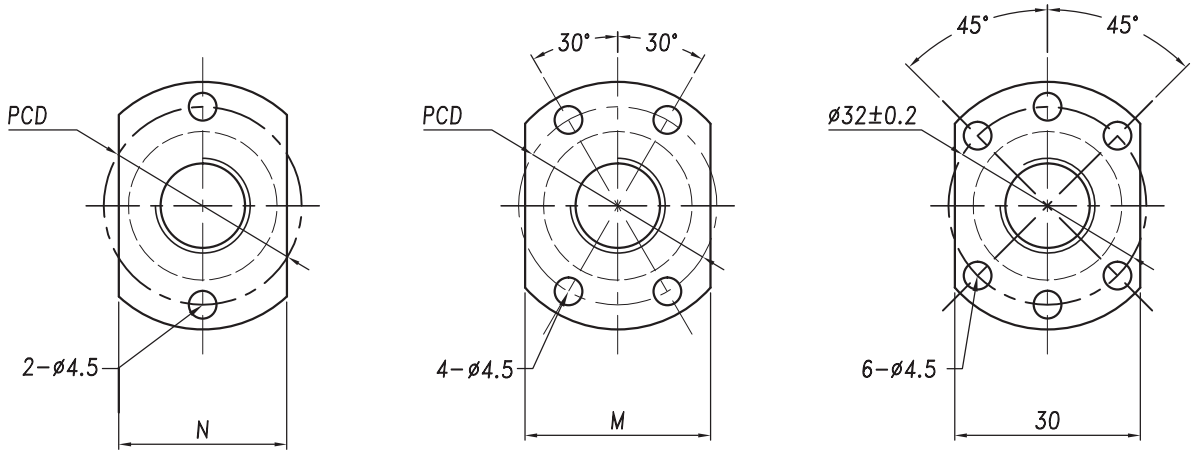

MPF0808 MPF1010

No	Model No	d	P	Da	N o . o f Circuit	loading(N)		Stiffness N/μm(K)	Nut size									
						Ca	Coa		D	F	L	S	PCD	B	No of mounting holes			X
															2 孔 (N)	4 孔 (M)	6 孔	
1	MPF0804	8	4	2.0	3.5	2300	3900	87	21	39	28	/	31	5	23	23	/	Φ4.5
2	MPF0805	8	5	1.588	2.5	1850	2960	85	18	31	28	/	25	4	20	20	/	Φ3.4
3	MPF0808	8	8	1.588	2.5	1700	3400	85	18	31	30	6	25	4	/	20	/	Φ3.4
4	MPF1010	10	10	2.0	2.5	2470	4600	92	23	40	36	6	32	6	/	25	/	Φ4.5
5	MPF1208	12	8	2.381	2.5	2840	5190	210	24	40	42	/	32	10	/	/	30	Φ4.5
6	MPF1210	12	10	2.5	2.8	6420	12870	190	24	40	48.5	/	32	10	/	/	30	Φ4.5
Notes:Customized end machining is available upon request																		